15 February 2021

600-700-700T-780-780T-900-1100 Freestanding Square & 440-600-700-700T-780-780T-900-1100 Freestanding Taper Top

Freestanding Solid Fuel Burner - Indoor Open Wood Fire

Available in Square Top or Taper Top Options

Installation Instructions

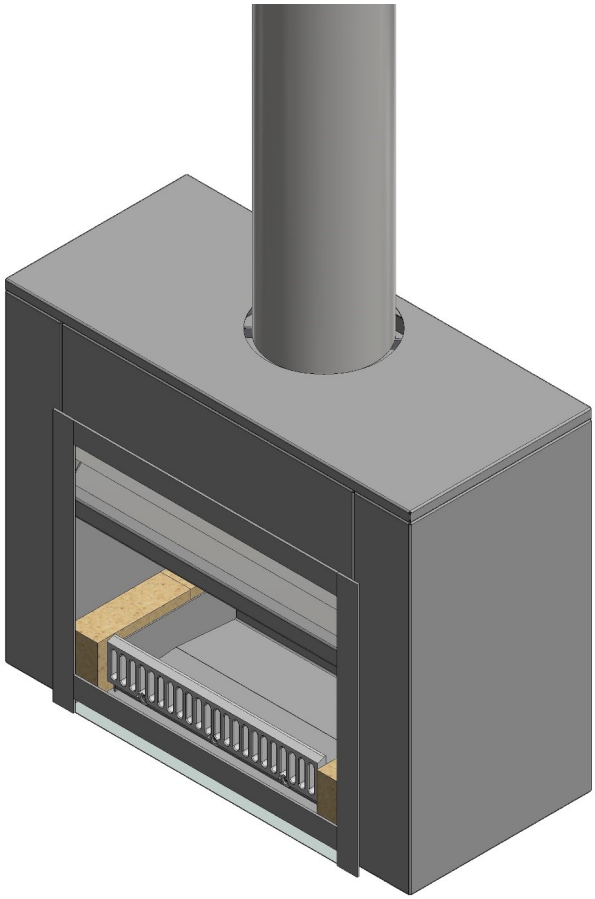

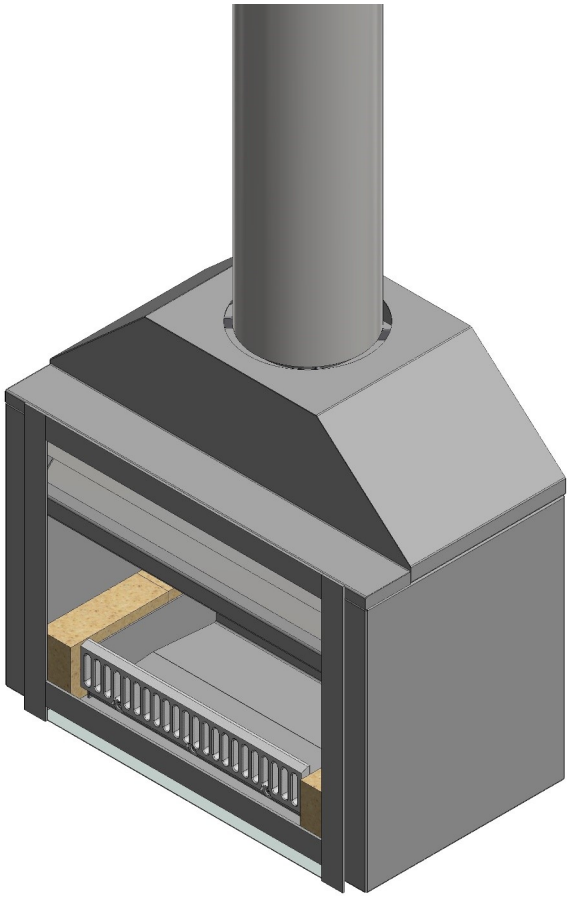

Note: Flue System Casing
Flue system may require to be double lined to comply. Ref ASNZS:2918:2001 4.3 Flue pipe casing.

Visit www.warmington.co.nz for specs, DWGs and PDF uploads of fires

Fires and flue system to comply with ASNZS 2918:2001 & Building Code C/AS1 7.5 Open Fires

Keep these instructions for further reference. Ensure that you have the correct and current installation details for the Warmington Fire.

Installation

The Warmington unit is to be installed by a certified Warmington installer or an approved NZHHA installation technician.

IMPORTANT

Read all the instructions carefully before commencing the installation. Failure to follow these instructions may result in a fire hazard and void the warranty.

Due to continued product improvement, Warmington Ind LTD reserves the right to change product specifications without prior notification.

All dimensions are in mm

Copyright

COMPONENTS REQUIRED FOR CONSTRUCTION

Supplied	No:
Warmington SI Firebox 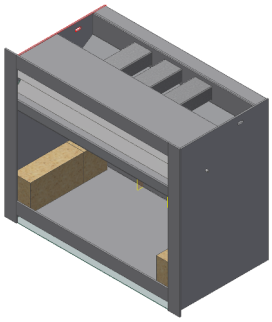	1
Warmington SI Adaptor 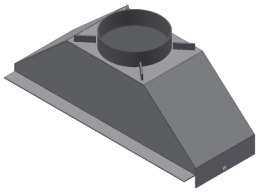	1
Warmington SI Ashpan 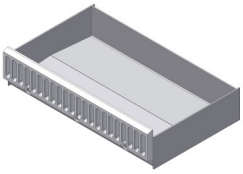	1
Warmington SI Freestanding Cabinet Eg. 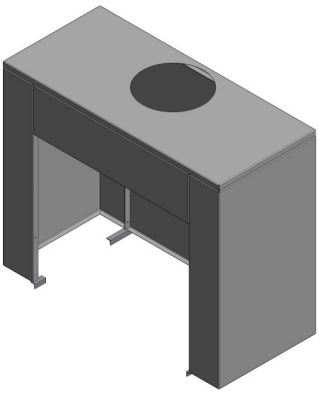	1

NOT Supplied (sold separately)	No:
Warmington Freestanding Flue kit 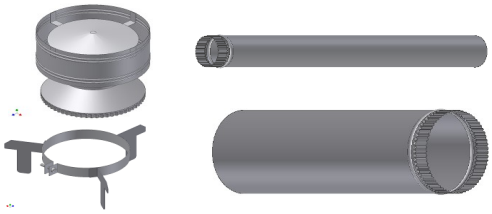	1
Flashing System 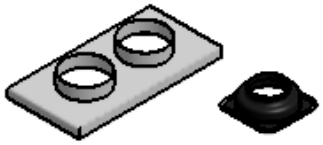	1
Hearth/ Plinth 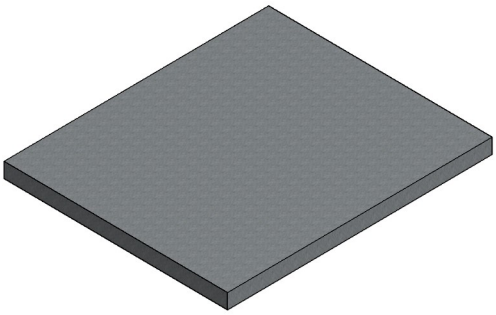	1
Exhaust Sealant	
Gas fitting (for log lighters)	
Fire / Flue kit / Flashing Installation	
Council Permit	

Assembly Check List	Tick Box
Firebox	
Freestanding cabinet	
Adaptor w. fastenings	
Ash Pan	
Bricks	
Louvres	
Badge	
Damper handle	
Specifications	
Packed By	

Due to continued product improvement, Warmington Ind LTD reserves the right to change product specifications without prior notification.

All dimensions are in mm

Copyright

GENERAL INFORMATION

HEAT OUTPUT

Description	SI 600	SI 700	SI 700T	SI 780	SI 780T	SI 900	SI 1100
Peak output (kW)	12	15	15	17	19	23	25
Expected range (kW)	8-10	10-12	10-12	11-12	12-14	13-15	14-16

*Estimated outputs for all sizes, apart from 780T size which has been tested.

POINTS TO CONSIDER PRIOR TO INSTALLATION

Location of the fire:
Open fires are better located at one end of a room or area, as they project the heat away from their opening.

The Topography of the Land:
The slope and position of the land in relation to the home has a bearing on how the wind will interact with the fire and flue system. Care needs to be taken to ensure that the flue termination is in the correct position to maximise performance.

The Prevailing Wind.
Care needs to be taken to ensure that the flue termination is in the correct position, as wind gusts that hit the flue and cowl system may overcome the cowl and draught back down the flue into the home. This can be a combination of down draught and high pressure.

Pressure Differential, Venting & External Air into the Building:
All fires need air to burn and draw correctly. Kitchen fans, air conditioning units, high wind zones, and naturally forming draught spaces can all have an effect on the pressure differential from inside the building to the outside. A lower pressure in the building may induce a draught down the flue system and back into the building, causing the fire to smoke or spill into the building. Care needs to be taken at the design and installation stage to adequately vent the building to ensure that there is always a neutral or positive pressure at the fireplace and a negative pressure at the flue outlet (a mechanical system can be added to aid this if necessary). This will ensure that the draught in the flue system is always to the outside.

Wind Noise:
You may encounter wind noise in some installations. It is recommended to use an enclosed chase with a chimney pot to help reduce noise. There will always be some noise from the flue systems of all fireplaces.

INSTALLATION

Important Notes:

- This is a general installation guide only. Contact a "NZHHA Installer" for installation advice or go to www.homeheat.co.nz, then select Members & follow instructions to find a certified NZHHA SFAIT installer.
- Install to AS/NZS 2918 and to manufacturer's specifications. **This installation scenario is untested. Installation details must comply to relevant untested sections of AS/NZS 2918.** All clearances/ hearth projections etc are minimums.
- All new installations require a permit. Check with your local council about compliance.
- For special requirements concerning materials (timber mantle and surrounds) within close proximity of Warmington products, please contact your local Warmington technical consultant or designated installer.

INSTALLATION PROCEDURE FOR NZHHA CERTIFIED INSTALLER

- Mark out flue centre on floor.
- Mark out relevant clearance requirements.
- Construct plinth/ hearth to required height and external dimensions (follow AS/NZS untested floor protector requirements).
- Bolt firebox to plinth through seismic restraint brackets, using M8 Dyna bolts.
- Remove cabinet top cap from cabinet assembly, and seal firebox adaptor to firebox using high temperature gasket sealant
- Replace top cap
- Install flue system (see pages 8 to 11 for details).

Due to continued product improvement, Warmington Ind LTD reserves the right to change product specifications without prior notification.

All dimensions are in mm

Copyright

Caitec 'Weir' Vent System (concept only)

"CAITEC" TECHONOLGY—ROOM AIR REPLACEMENT

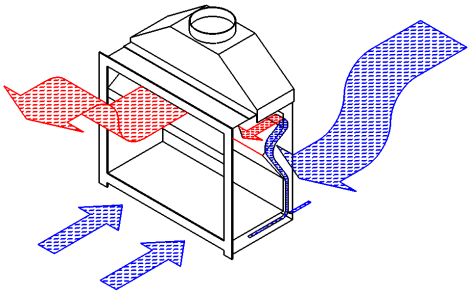

Caitec" draws air from an external air source to ensure that combustion air that the open fire uses is replaced, maintaining the home at a constant pressure equilibrium reducing the risk of back drafting .
Ensure that the home is vented to outside fresh air. 2 x 100mm Diameter vents are required (or equivalent).

Builder to supply external air to the Warmington Fire (vents not supplied).

Concept Drawings Only

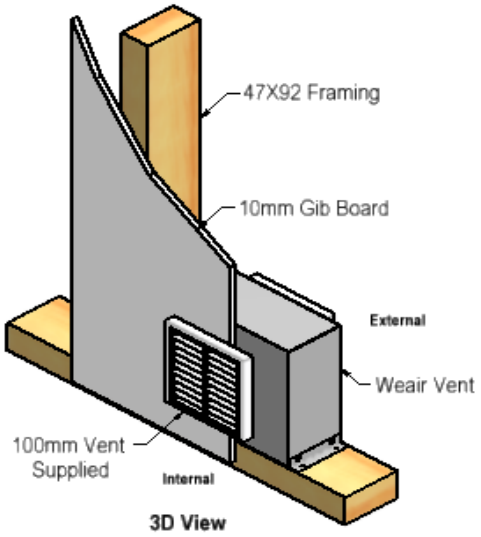

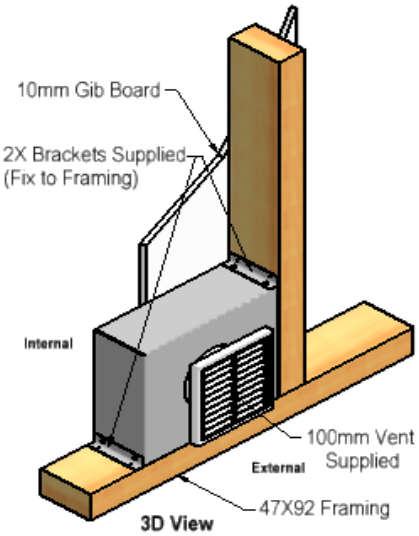

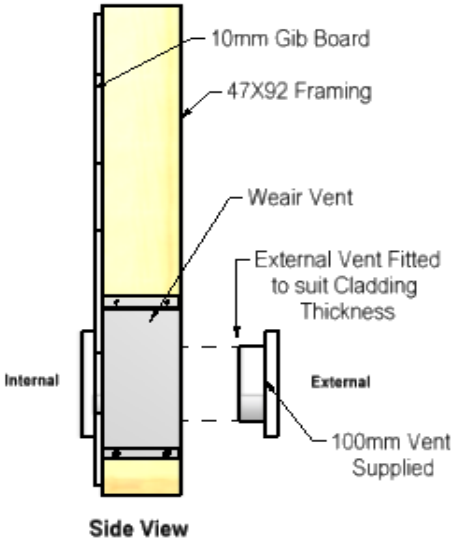

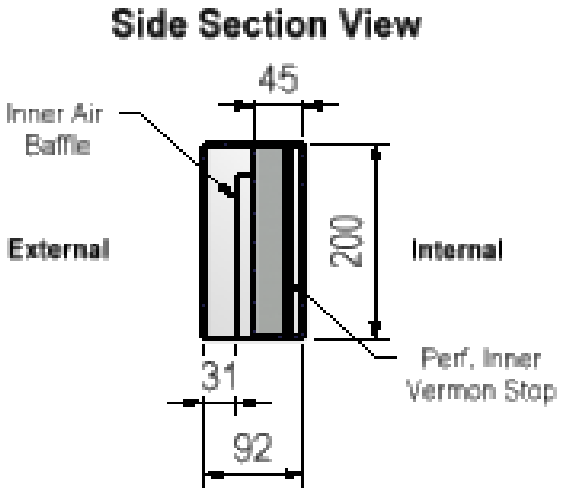

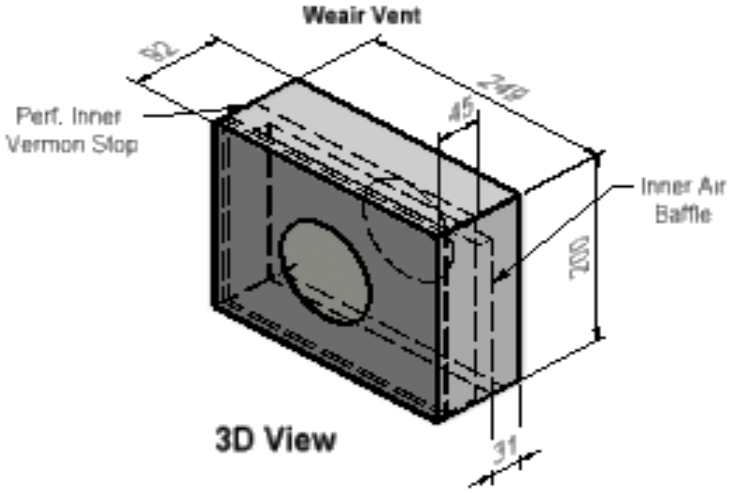

Important Note:
For optimum performance place "Caitec" weir vent system as close to fireplace as possible.

Due to continued product improvement, Warmington Ind LTD reserves the right to change product specifications without prior notification.

All dimensions are in mm

Copyright

1.1.1 WARMINGTON SI FREESTANDING FIREBOX WITH SQUARE TOP CABINET

		SI 600	SI 700	SI 700T	SI 780	SI 780T	SI 900	SI 1100
Square top cabinet width	A	900	1000	1000	1080	1080	1200	1400
Square top cabinet height	B	840	840	920	840	920	1060	1110
Square top cabinet depth	C	450	450	450	450	450	500	550
Flue diameter	D	200	200	200	200	200	250	300
Baffle diameter	E	250	250	250	250	250	300	350
Liner diameter	F	300	300	300	300	300	350	400
Front to flue	G	290	290	290	290	290	310	340
Spigot height	H	810	810	860	810	890	1020	1070

Minimum Flue Height	
Flue height	3600
Measured from top of hearth	H + 3600

Notes:

For combustible flooring, a hearth/ plinth constructed of 75mm autoclaved aerated concrete (AAC), is required. Hearth projection to comply to AS/NZS 2918 clause 3.3.3.

Dimension H is taken from the top of the hearth to the top of the adaptor (where the flue starts).

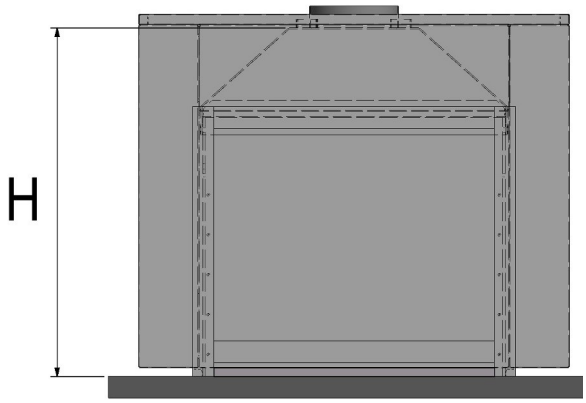

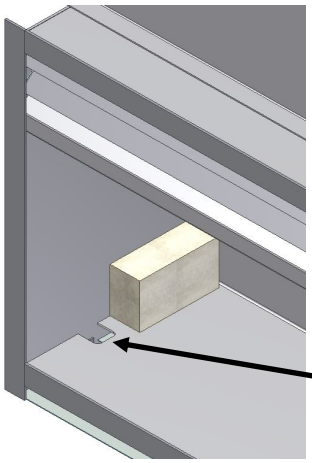

Note:

Seismic restraint brackets located under forrard side bricks.

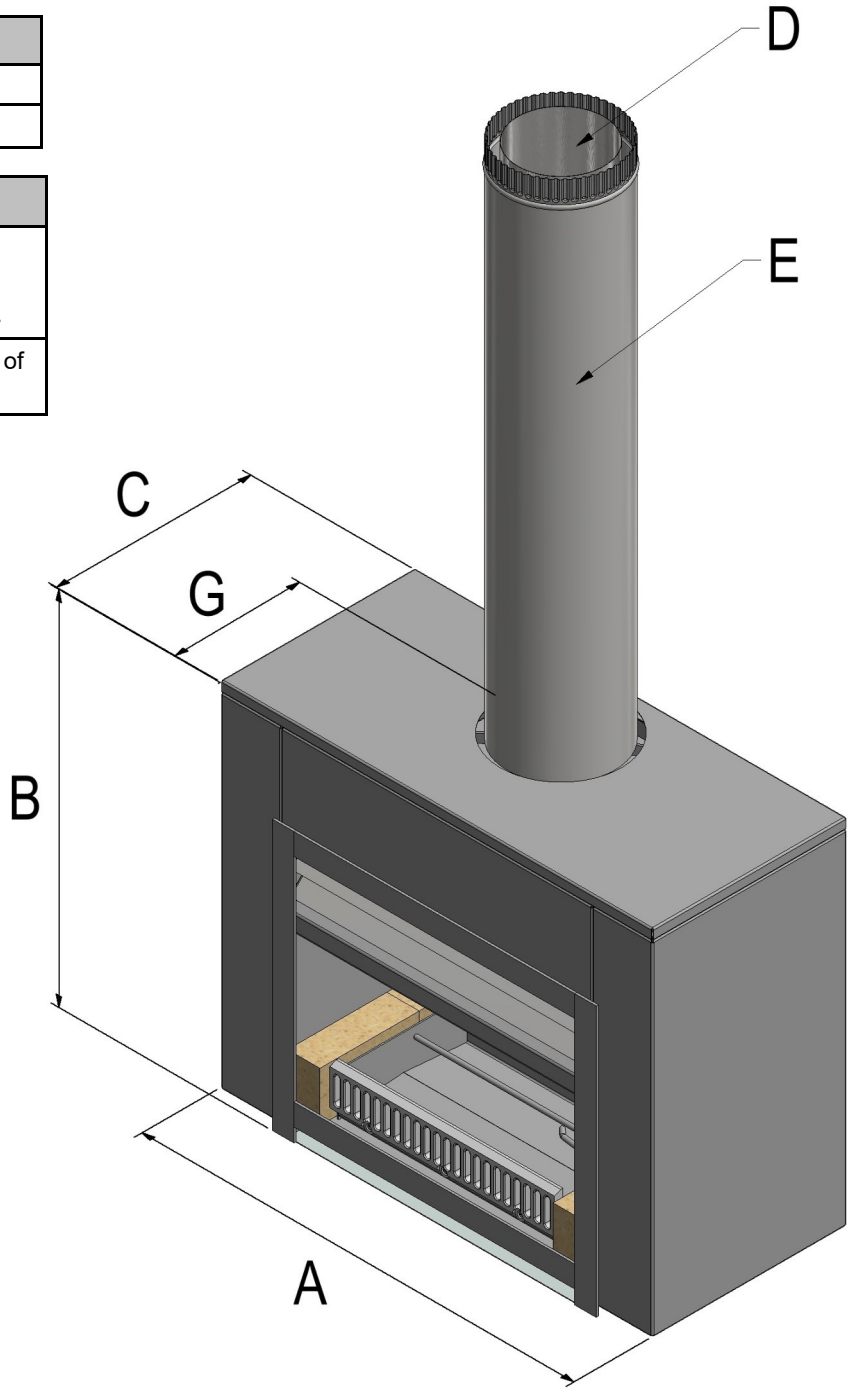

Due to continued product improvement, Warmington Ind LTD reserves the right to change product specifications without prior notification.

All dimensions are in mm

Copyright

1.1.2 FREESTANDING SQUARE TOP- COMBUSTIBLE WALL CLEARANCES– STRAIGHT ORIENTATION

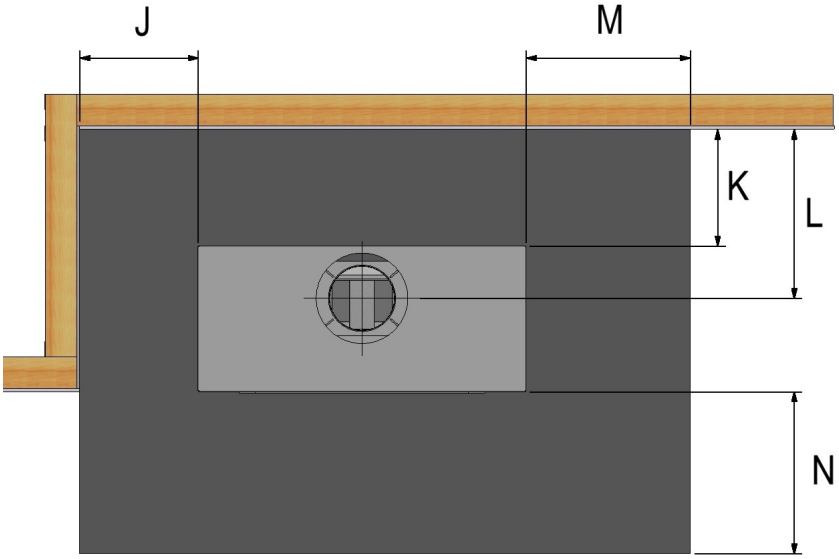

Notes:
For combustible flooring, a hearth/ plinth constructed of 75mm autoclaved aerated concrete (AAC), is required.
The hearth must extend 500mm in all directions beyond the perimeter of the appliance, except where it forms an abutment with a wall, in which case relevant clearances J and K apply.
Side wall clearance J applies on both sides if installing into an alcove.
For non-combustible walls, minimum 100mm access clearance applies.

		SI 600	SI 700	SI 700T	SI 780	SI 780T	SI 900	SI 1100
Side wall clearance	**J**	50	210	210	210	210	210	210
Clearance wall back	**K**	50	310	310	310	310	310	310
Flue centre to back wall	**L**	210	480	480	480	480	495	520
Hearth side projection	**M**	75	100	100	60	60	75	75
Hearth front projection	**N**	410	410	410	410	410	500	650

Please Note: Clearance values as shown are derived from the untested appliance section in AS/NZS:2918. In this situation, a single layer of continuous material (here the cabinet is taken as the heat shield element) spaced 25mm min) off any combustible material, has been implemented to give a clearance factor of 0.3, allowing the untested clearance to be reduced.
The clearances in the specification are measured from the outside of the cabinet, as this a more practical dimension for installers.

1.1.3 FREESTANDING SQUARE TOP- COMBUSTIBLE WALL CLEARANCES– CORNER ORIENTATION

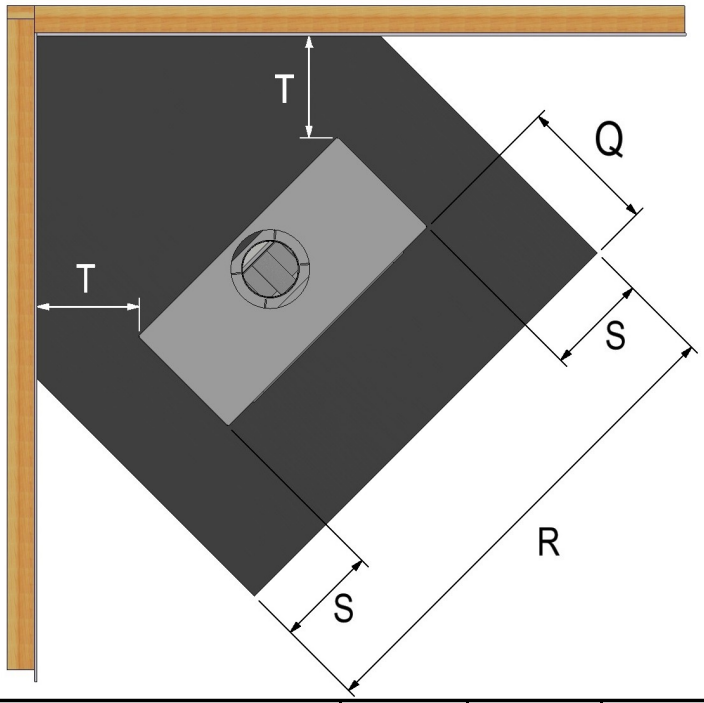

Notes:
For combustible flooring, a hearth/ plinth constructed of 75mm autoclaved aerated concrete (AAC), is required.
The hearth must extend 500mm in all directions beyond the perimeter of the appliance, except where it forms an abutment with a wall, in which case relevant clearance T applies.
Clearance T applies to the smallest distance from the appliance to a wall.
For non-combustible walls, minimum 100mm access clearance applies.

		SI 600	SI 700	SI 700T	SI 780	SI 780T	SI 900	SI 1100
Hearth front projection	**Q**	410	410	410	410	410	500	650
Hearth width	**R**	1050	1200	1200	1200	1200	1350	1550
Hearth side projection	**S**	75	100	100	60	60	75	75
Wall clearance	**T**	50	310	310	310	310	310	310

Due to continued product improvement, Warmington Ind LTD reserves the right to change product specifications without prior notification.

All dimensions are in mm

Copyright

1.2.1 WARMINGTON SI FREESTANDING FIREBOX WITH TAPER TOP CABINET

		SI 440	SI 600	SI 700	SI 700T	SI 780	SI 780T	SI 900	SI 1100
Taper top cabinet width	AA	590	750	850	850	930	930	1050	1250
Taper top cabinet height	BB	835	835	835	885	835	915	1045	1095
Taper top cabinet depth	CC	470	470	470	470	470	470	520	570
Flue diameter	D	200	200	200	200	200	200	250	300
Baffle diameter	E	250	250	250	250	250	250	300	350
Liner diameter	F	300	300	300	300	300	300	350	400
Front to flue	GG	290	290	290	290	290	290	310	340
Spigot height	HH	810	810	810	860	810	890	1020	1070

Minimum Flue Height	
Flue height	3600
Measured from top of hearth	HH + 3600

Notes:

For combustible flooring, a hearth/ plinth constructed of 75mm autoclaved aerated concrete (AAC), is required. Hearth projection to comply to AS/NZS 2918 clause 3.3.3.

Dimension H is taken from the top of the hearth to the top of the adaptor (where the flue starts).

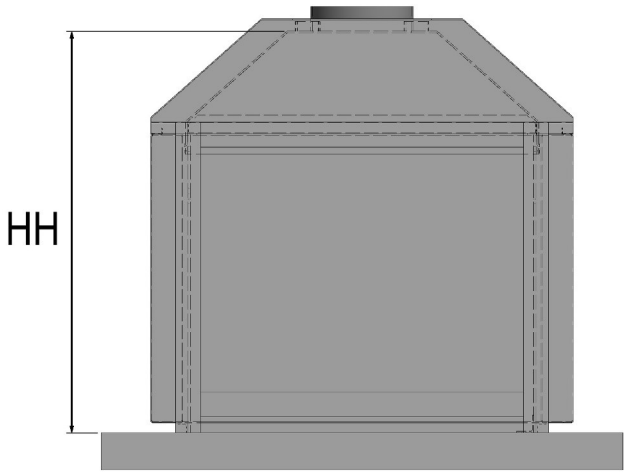

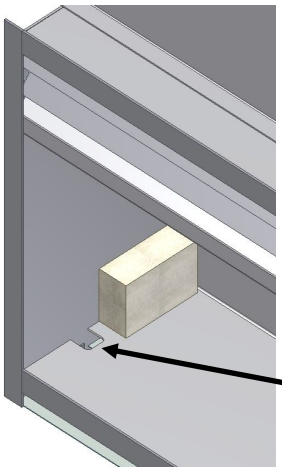

Note:

Seismic restraint brackets located under forrard side bricks.

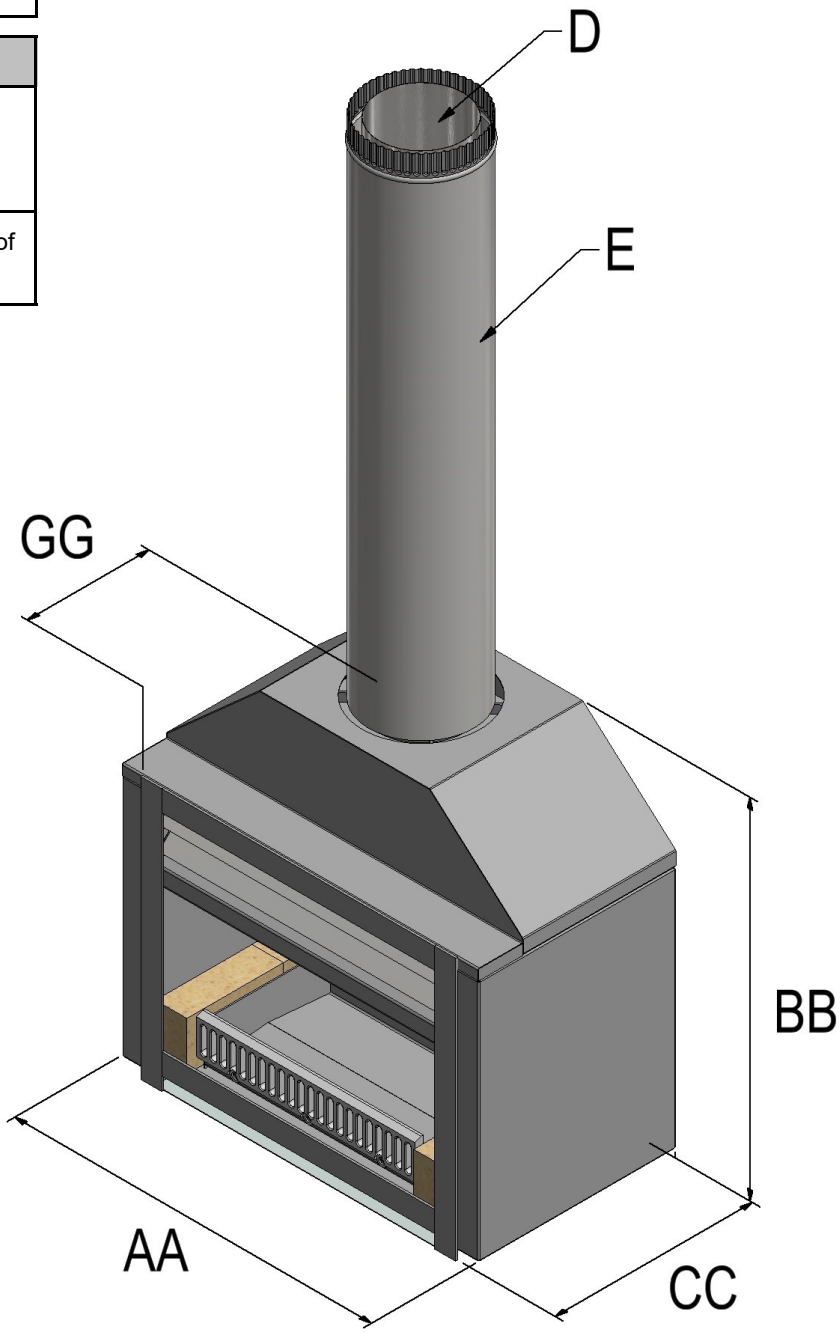

Due to continued product improvement, Warmington Ind LTD reserves the right to change product specifications without prior notification.

All dimensions are in mm

Copyright

1.2.2 FREESTANDING TAPER TOP- COMBUSTIBLE WALL CLEARANCES– STRAIGHT ORIENTATION

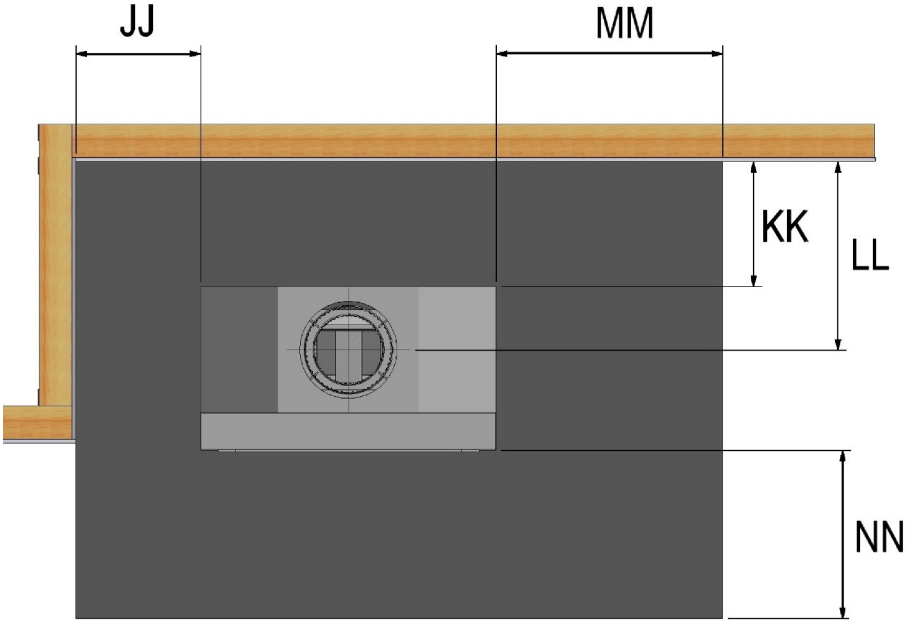

Notes:

- For combustible flooring, a hearth/ plinth constructed of 75mm autoclaved aerated concrete (AAC), is required.
- The hearth must extend 500mm in all directions beyond the perimeter of the appliance, except where it forms an abutment with a wall, in which case relevant clearances JJ and KK apply.
- Side wall clearance JJ applies on both sides if installing into an alcove.
- Clearances JJ and KK may be reduced to 240mm if heat shields are installed on combustible walls. AS/NZS 2918 heat shield requirements apply (12mm air gap).
- For non-combustible walls, minimum 100mm access clearance applies.

		SI 440	SI 600	SI 700	SI 700T	SI 780	SI 780T	SI 900	SI 1100
Side wall clearance	**JJ**	285	285	285	285	285	285	285	285
Clearance wall back	**KK**	290	290	290	290	290	290	290	290
Flue centre to back wall	**LL**	470	470	470	470	470	470	500	520
Hearth side projection	**MM**	150	150	175	175	135	135	150	150
Hearth front projection	**NN**	410	410	410	410	410	410	500	650

1.2.3 FREESTANDING TAPER TOP- COMBUSTIBLE WALL CLEARANCES– CORNER ORIENTATION

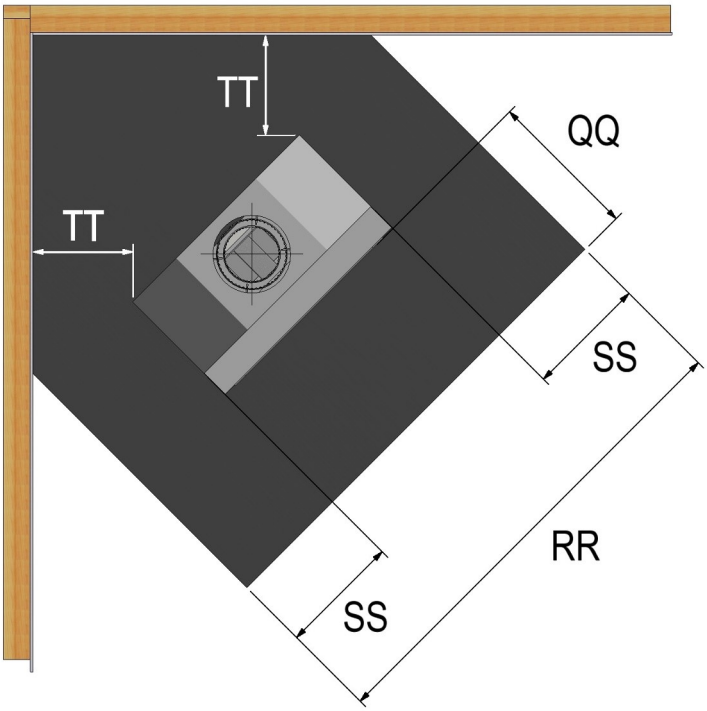

Notes:

- For combustible flooring, a hearth/ plinth constructed of 75mm autoclaved aerated concrete (AAC), is required.
- The hearth must extend 500mm in all directions beyond the perimeter of the appliance, except where it forms an abutment with a wall, in which case relevant clearance T applies.
- Clearance T applies to the smallest distance from the appliance to a wall.
- Clearance T may be reduced to 240mm if heat shields are installed on combustible walls. AS/NZS 2918 heat shield requirements apply (12mm air gap).
- For non-combustible walls, minimum 100mm access clearance applies.

		SI 440	SI 600	SI 700	SI 700T	SI 780	SI 780T	SI 900	SI 1100
Hearth front projection	**QQ**	410	410	410	410	410	410	500	650
Hearth width	**RR**	890	1050	1200	1200	1200	1200	1350	1550
Hearth side projection	**SS**	150	150	175	175	135	135	150	150
Wall clearance	**TT**	290	290	290	290	290	290	290	290

Due to continued product improvement, Warmington Ind LTD reserves the right to change product specifications without prior notification.

All dimensions are in mm

Copyright

STEP-BY-STEP INSTALLATION INSTRUCTION

GENERAL SI

PANEL ASSEMBLY

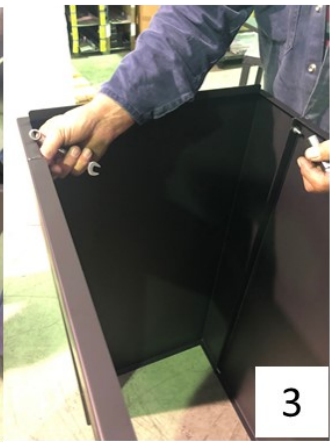

FIREBOX - CABINET ASSEMBLY

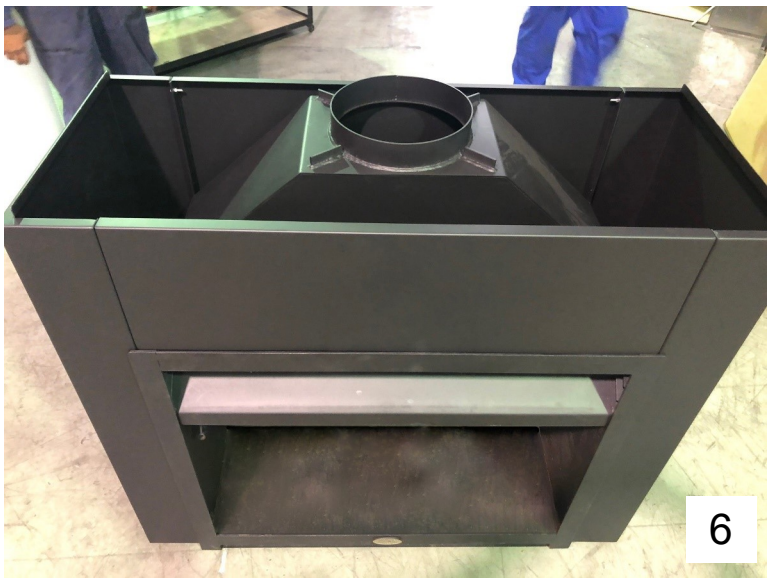

Due to continued product improvement, Warmington Ind LTD reserves the right to change product specifications without prior notification.

All dimensions are in mm

Copyright

FLUE SYSTEM INSTALLATION

FLUE DETAILS DIMENSIONS

Minimum Flue Height	
Flue Height	3600
Measured from top of hearth	H + 3600

Note: FLUE SYSTEMS Casing
Flue system may require to be doubled lined to comply. Ref ASNZS:2918:2001 4.3 flue pipe casing

	No:	SI 440	SI 600	SI 700	SI 700T	SI 780	SI 780T	SI 900	SI 1100
Cowl, cone and spider	1	200	200	200	200	200	200	250	300
Flue diameter	3	200	200	200	200	200	200	250	300
Baffle diameter	2	250	250	250	250	250	250	300	350
Liner diameter	2	300	300	300	300	300	300	350	400
50mm Spacer	1	200/300	200/300	200/300	200/300	200/300	200/300	250/350	300/400
25mm Spacer	3	200/250	200/250	200/250	200/250	200/250	200/250	250/300	300/350
25mm Spacer	2	250/300	250/300	250/300	250/300	250/300	250/300	300/350	350/400
Ceiling Plate	1	250	250	250	250	250	250	300	350

NOTE: Ensure that a standard tested Warmington flue system is used on the Warmington fires.

FLUE SYSTEM INSTALLATION GUIDE

This is a general installation guide only – Contact a "NZHHA Installer" for Installation Advice or go to www.homeheat.co.nz then select Members & follow Instructions, to find a Certified NZHHA SFAIT Installer.

1. Install the first length of flue pipe with the crimped end down, inside the adaptor collar, and ensure the flue pipe is sealed into the collar with exhaust sealant. Rivet the flue in 3 places around the adaptor collar. Place a spacer around the flue pipe approximately 150mm above the adaptor collar and secure in position by tightening the screw and nut.
2. Install the second length of flue pipe with the crimped end down and secure by riveting in at least 3 places around the flue pipe joint. Ensure the flue is secured into position.
3. Install the first inner baffle with the crimped end up, over the first flue pipe & spacer, ensuring you leave room to rivet off flue. Fit the second spacer over inner baffle then slide the outer liner with the crimped end, up over inner baffle. The spacers will keep the liners concentric around the flue pipe.
4. Position spacers over the flues for every length of 'flue pipe', 'Inner baffle' and 'liner'.
5. Repeat steps 1 – 4 to the installed required height of the flue system. The flue system is to comply with ASNZS 2918:2001 4.9.1.
6. **NOTE:** The last length of flue pipe needs to extend past the liner so that when the 'top spider' and the 'flashing cone' are fitted, the 'flashing cone' and the 'flue pipe' are **flush,** or that the flue pipe' is **5mm lower** that the 'flashing cone'.
7. Fit the 'top spider' into position, ensure that the legs of the spider are fitted inside the liner and that the spider is positioned hard down onto the liner, and tighten with the screw and nut.
8. Place the 'flashing cone' over the 'flue pipe' and press hard down onto the 'top spider'. (Note that the 'flue pipe" and the 'flashing cone' are either flush or the 'flue pipe' is 5mm Lower than the 'flashing cone'). Ensure that the "'flashing cone' is clear for the venting from the 'liner' and the 'flue pipe'.
9. Fit the 'cowl' to the top of the flue pipe. The 'cowl', 'flashing cone', and the 'flue pipe' can be secured to each other with the use of a stainless steel self tapping screw. This will allow the 'cowl' to be removed for cleaning.
10. The flue system may require bird proofing depending on the installation and location. Discuss this with your Installer for the best advice.
11. If the flue system is installed into a 'chimney chase', allow for air vent as close to the top of the chase as practical, or allow venting through the 'chimney chase flashing'. A 'venting flashing cone' and a 25mm gap around the liner with a 'venting flashing cone-spider' can be used.

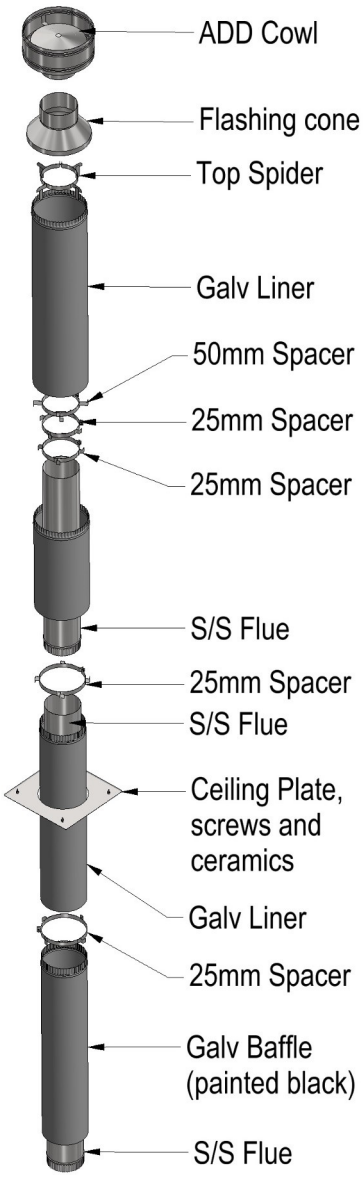

Due to continued product improvement, Warmington Ind LTD reserves the right to change product specifications without prior notification.

All dimensions are in mm

Copyright

FREESTANDING FLUEKIT DETAILS

		SI 600	SI 700	SI 700T	SI 780	SI 780T	SI 900	SI 1100
Top of cabinet to ceiling	Y	880	880	805	845	765	930	760
Minimum ceiling height	Z	1700	1700	1700	1700	1700	1900	1900

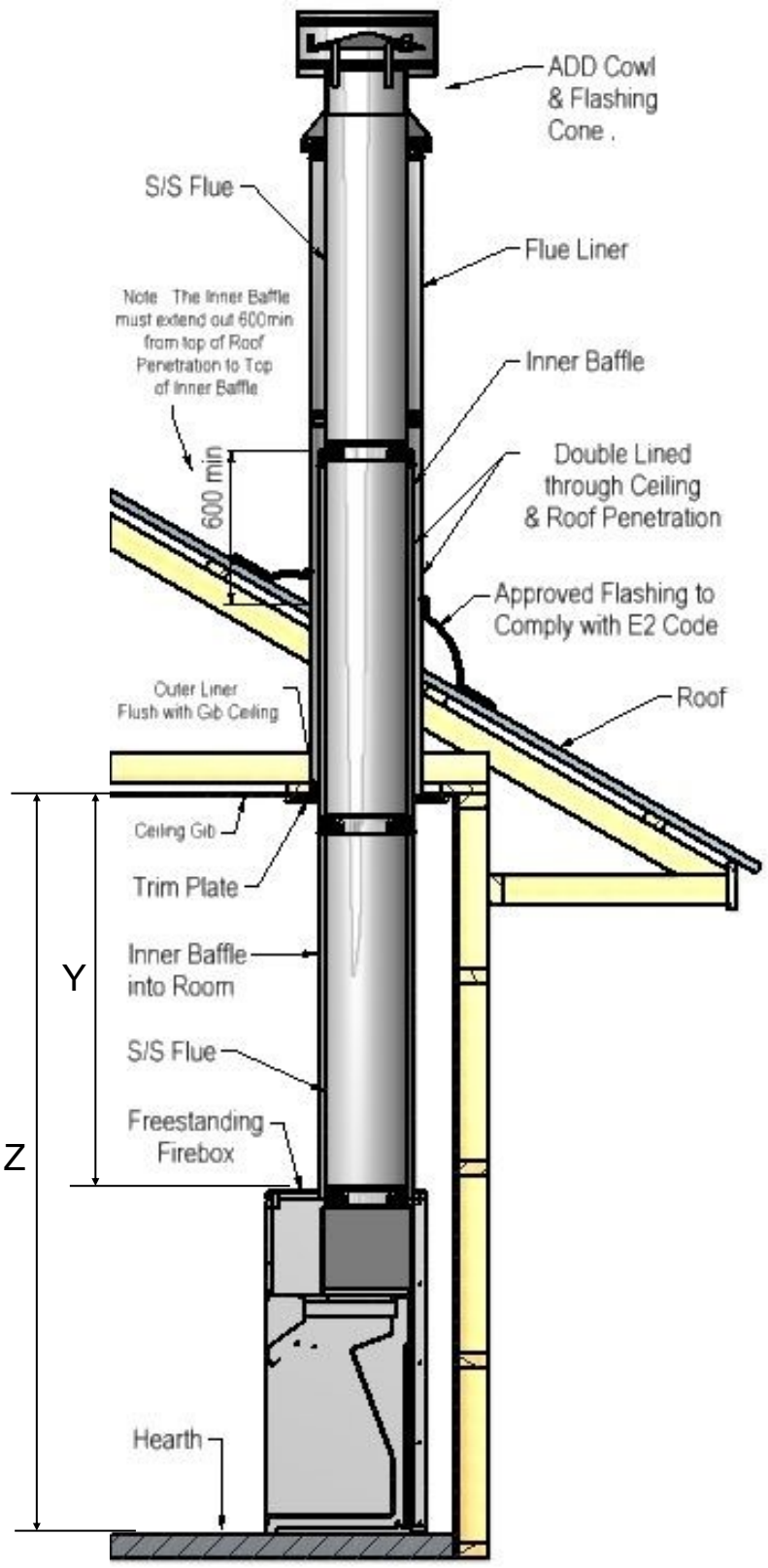

Test Report Number	Date of Report
04/1039	20th July 2004
04/1040	20th July 2004
04/1041	20th July 2004

Notes:

Install flue system to AS/NZS 2918. For external flue requirements refer to AS/NZS2918:2001 4.9.1, and/or page 10 of this document.

All flashing to comply to E2 NZ Building Code. When using a rubber or Bitumen flashing (Butynol, Dektite), an additional flue pipe baffle is required.

A minimum height must be maintained from the top of the cabinet to the ceiling as per the table above.

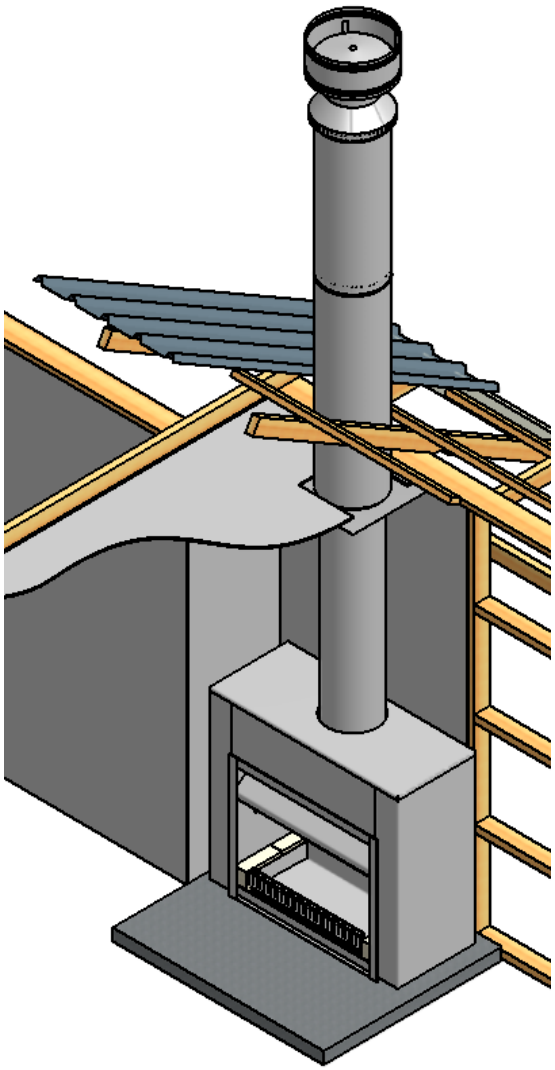

Due to continued product improvement, Warmington Ind LTD reserves the right to change product specifications without prior notification.

All dimensions are in mm

Copyright

CHIMNEY CHASE FLASHING DETAILS

General Chimney Chase Flashing Lay Out

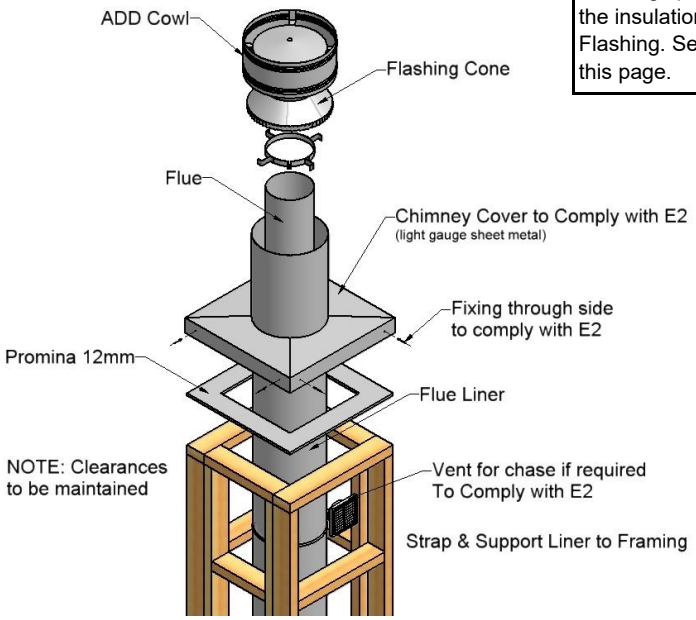

Note:

Flashing spigot height is determined by the insulation that is fitted under the Flashing. See details at the bottom of this page.

SETTING ADD COWL AND FLASHING CONE HEIGHT

STEP 1

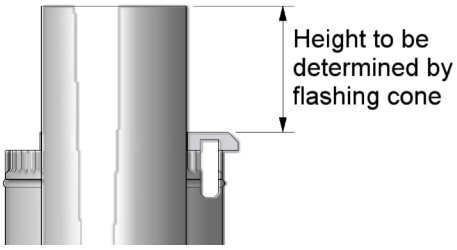

STEP 2

Flue 5mm Below Top Of Flashing Cone

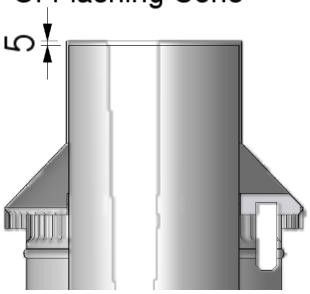

STEP 3

ADD Cowl Sits on Top of Flashing Cone, screw to secure

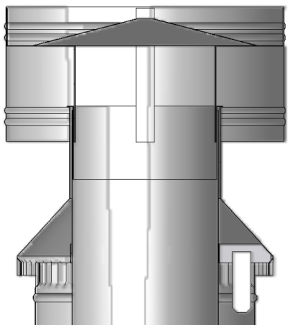

CHIMNEY CHASE FLASHING AND AIR VENTILATION OPTIONS

VENTING THROUGH CHIMNEY CHASE

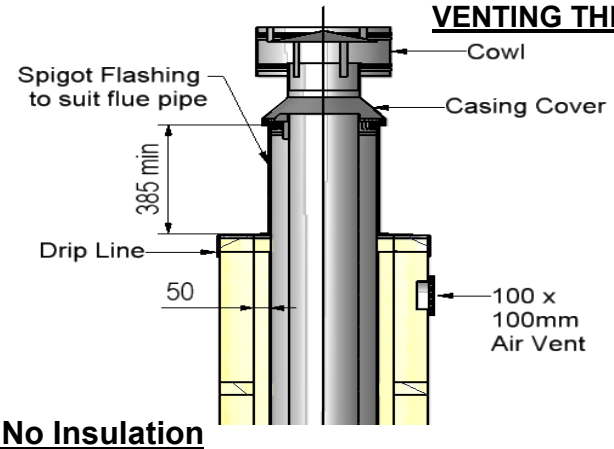

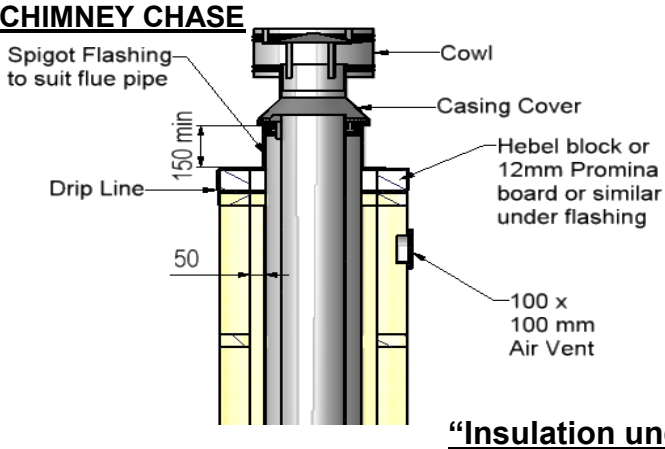

"No Insulation under flashing"

VENTING THROUGH FLASHING

"Insulation under flashing"

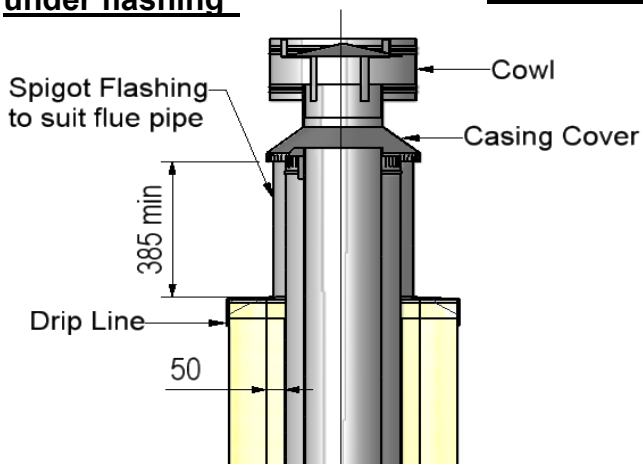

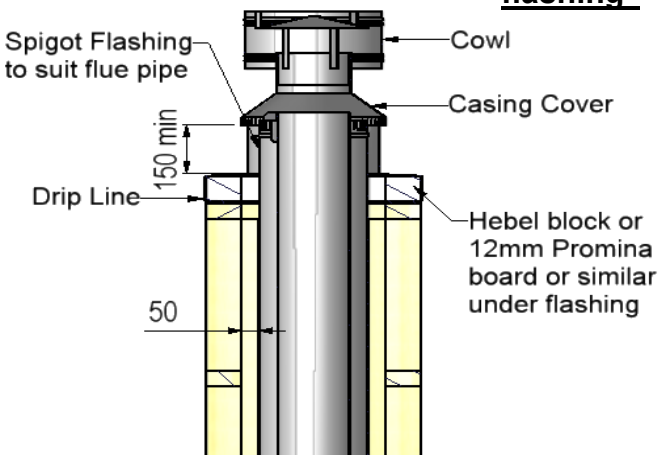

Due to continued product improvement, Warmington Ind LTD reserves the right to change product specifications without prior notification.

All dimensions are in mm

Copyright

FLUE SYSTEM EXTERNAL REQUIREMENTS

- The minimum height of the flue system within 3m distance from the highest point of the roof shall be minimum 600mm above that point
- The minimum height of the flue system further than 3m from the highest point of the roof shall be 1000mm or more above the roof penetration
- The flue exit must be clear of any surrounding buildings by a horizontal radius of at least 3m

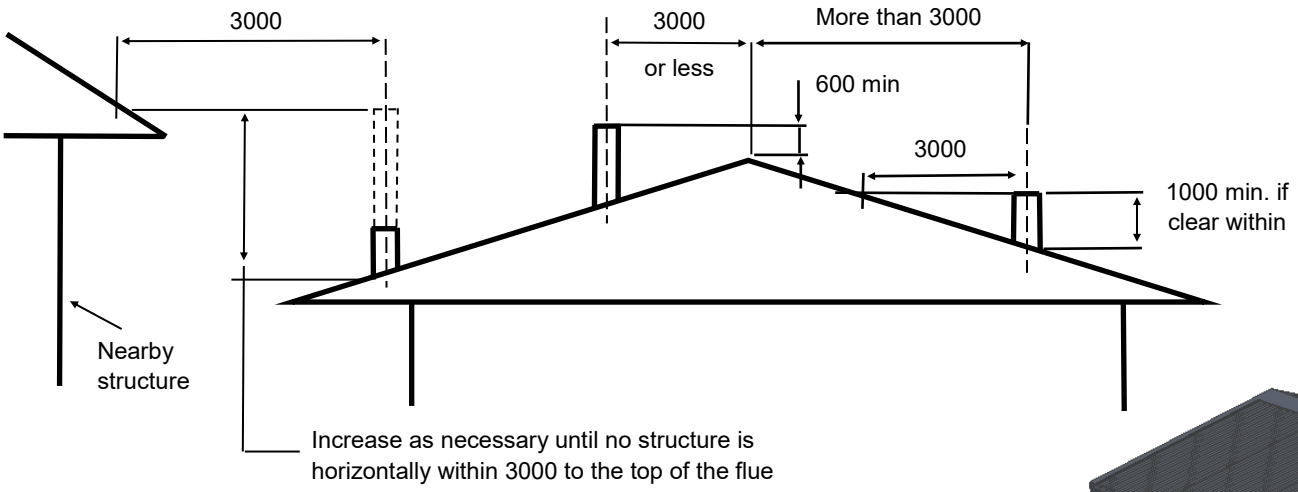

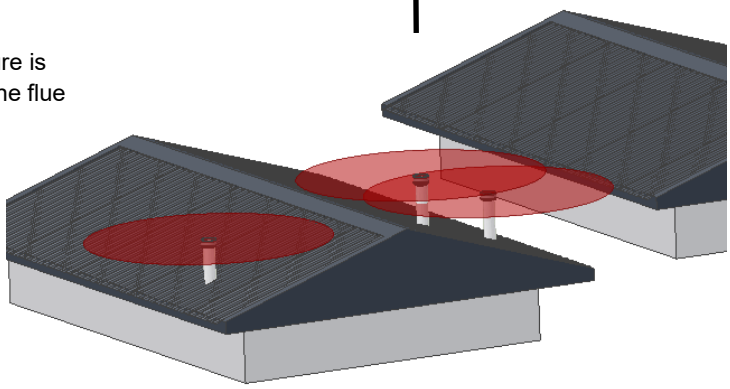

3D View

FLUE SYSTEM REQUIREMENTS FOR CHIMNEY CHASE

Option X – Single Lined Flue System

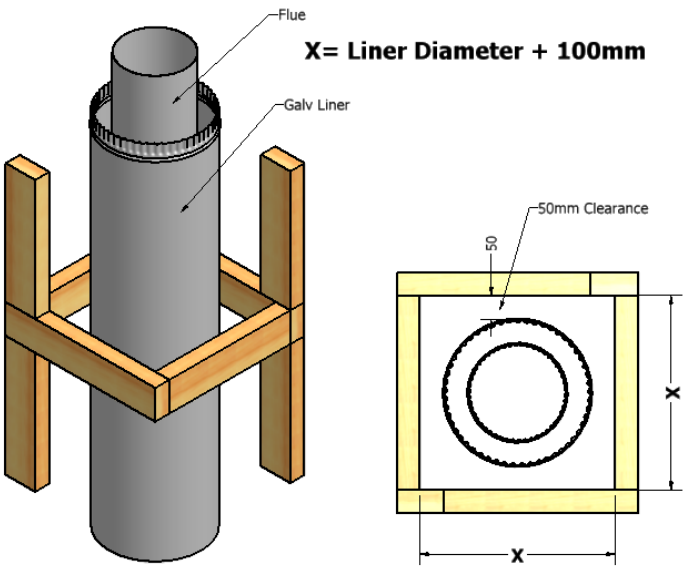

Option Y – Double Lined Flue System

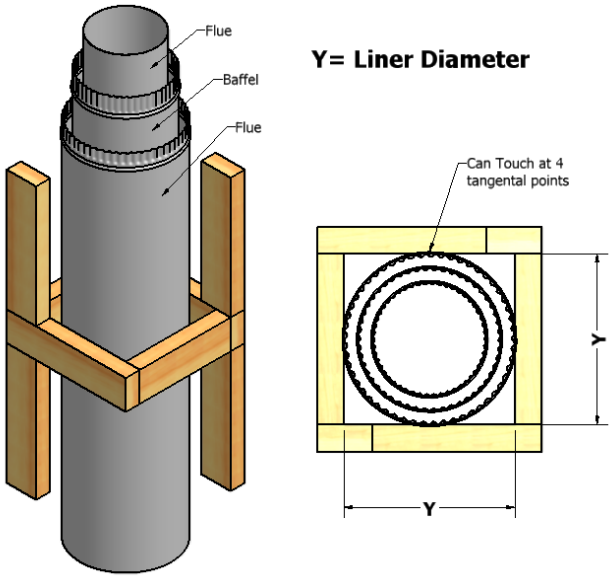

Due to continued product improvement, Warmington Ind LTD reserves the right to change product specifications without prior notification.

All dimensions are in mm

Copyright

GENERAL NOTES:

- Fire operational and maintenance instructions can be downloaded from **www.warmington.co.nz**
- Warranty - for full details on product warranties, contact your local authorised Warmington Retailer.
- Correct installation, operation and maintenance must be maintained to comply with Warmington warranty.
- The appliance and flue system must be installed in accordance with ASNZS2918:2001 and the appropriate building codes.
- The flue system and fireplace is to be swept annually or more frequently if required.

WARNINGS:

- **WARNING: THE APPLIANCE AND FLUE SYSTEM SHALL BE INSTALLED IN ACCORDANCE WITH AS/NZS 2918 AND THE APPROPRIATE REQUIREMENTS OF THE RELEVANT BUILDING CODE OR CODES**
- **WARNING: APPLIANCES INSTALLED IN ACCORDANCE WITH THIS STANDARD SHALL COMPLY WITH THE REQUIREMENTS OF AS/NZS 4013 WHERE REQUIRED BY THE REGULATORY AUTHORITY, I.E. THE APPLIANCE SHALL BE IDENTIFIABLE BY A COMPLIANCE PLATE WITH THE MARKING 'TESTED TO AS/NZS 4013'.**
- **ANY MODIFICATION OF THE APPLIANCE THAT HAS NOT BEEN APPROVED IN WRITING BY THE TESTING AUTHORITY IS CONSIDERED TO BE IN BREACH OF THE APPROVAL GRANTED FOR COMPLIANCE WITH AS/NZS 4013.**
- CAUTION: MIXING OF APPLIANCE OR FLUE-SYSTEM COMPONENTS FROM DIFFERENT SOURCES OR MODIFYING THE DIMENSIONAL SPECIFICATION OF COMPONENTS MAY RESULT IN HAZARDOUS CONDITIONS. WHERE SUCH ACTION IS CONSIDERED, THE MANUFACTURER SHOULD BE CONSULTED IN THE FIRST INSTANCE.
- CAUTION: CRACKED AND BROKEN COMPONENTS MAY RENDER THE INSTALLATION UNSAFE.

NOTE: For operating instructions download from the website
www.warmington.co.nz

Industries 1994 LTD

PO Box 58652, Botany 2163, Auckland

Due to continued product improvement, Warmington Ind LTD reserves the right to change product specifications without prior notification.

All dimensions are in mm

Copyright